MS24HS1P4300

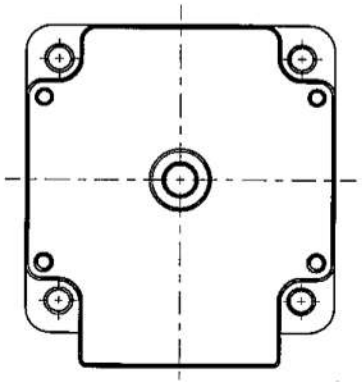

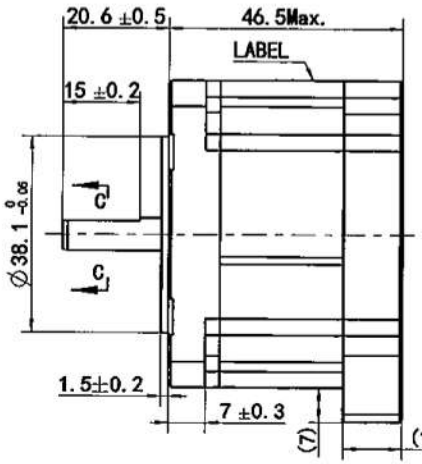

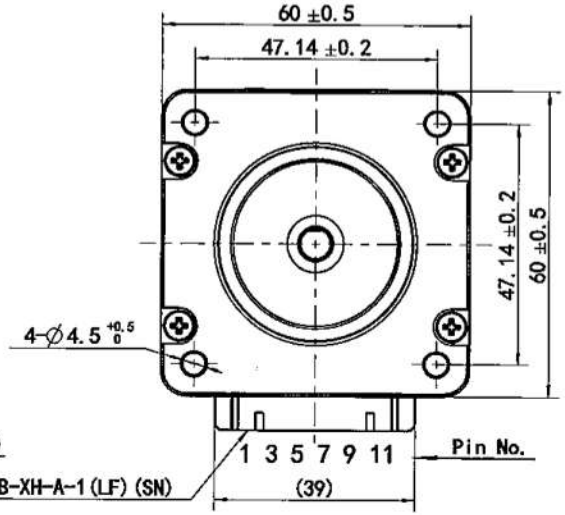

接线图
Witing Diagram

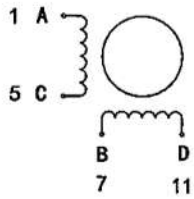

励磁顺序VS.旋转方向
Exciting Sequence vs.Direction of Rotation

STEP	A	B	C	D
1	+	+	−	−
2	−	+	+	−
3	−	−	+	+
4	+	−	−	+

CCW

CW

从安装面看为顺时针方向
Clockwise view from mounting side

混合式步进电机规格 Hybrid Stepping Motor Specifications	
1.相数 Number of Phase	2
2.步距角 Step Angle	1.8°
3.额定电压 Rated Voltage	2.19 V DC
4.额定电流 Rated Current	3 Amp
5.保持力矩 Holding Torque	1.23 Nm Typ.(Two phase on/rated current)
6.相电阻 Phase Resistance	0.73 ohm±0.1 (20℃)
7.相电感 Phase Inductance	1.61 mH±20%(1kHz 1V rms)
8.转子惯量 Rotor Inertia	280 gcm^2
9.电机重量 Motor Weight	0.6 kg
10.绝缘等级 Insulation Class	B (130℃)

C-C(2:1)

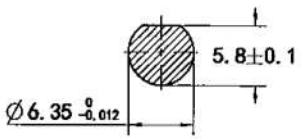

铭牌 Label Detail (2:1)
XXXXXXXX-Work order 加工单号
XXXX-Serial number 流水号

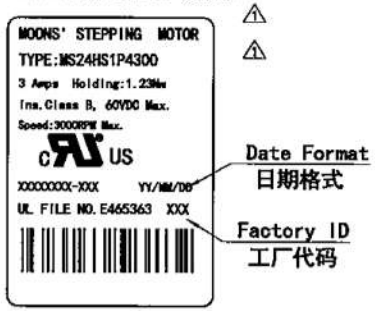

受控文件
日期 2023-09-19
鸣志电器(太仓)有限公司

REV.	版本记录 REVISION RECORD	DATE
A1	ECR23-317, There are two positions ⚠1	2023.03.17
A0	原始版本 Original revision	2016.06.06

Unit:mm
第一角画法
First angle method
未注线性与角度尺寸公差
Tolerances for linear and angular dimensions without individual tolerance indications
GB/T 1804-m eqv ISO 2768-1:m
未注形状与位置尺寸公差
Geometrical tolerance for features without individual tolerance indications
GB/T 1184-K eqv ISO 2768-2:K

UNLESS OTHERWISE SPECIFIED

NAMES	SIGNATURE	DATE
批准 Approve		
标准化 Standardize		
工艺 Process Review		
审核 Check		
设计 Design		

MOONS'
moving in better ways

This document is released for information only. Its reproduction in whole or in part or its dissemination to third parties is prohibited.
All trademarks and registered trademarks appearing on this document are the property of their respective owners.

Drawing No: 4611110015726 | Rev. A1 | SCALE: 1:1 | Sheet 1 of 1